prompt®
Weighing and Packaging Systems

HAWK PHARMA SERIES

The Intelligent Checkweigher for Pharmaceutical Manufacturing

Designed to meet
Good Manufacturing Practice (GMP)
requirements



Hawk Pharma Series

Checkweigher designed for pharmaceutical GMP



High Speed, Great Efficient
400 pcs/min

Wide Weighing Range
5~600g

Display Accuracy
±10 mg

Best Accuracy
±0.1g

Hawk Pharma series checkweigher is engineered to comply with pharmaceutical GMP standards, ensuring high-precision, high-speed, and **24/7** stable dynamic weighing performance.

AI Filtering Technology

Designed for unstable products (e.g., wobbling vials, ampoules, blister packs), **AI algorithms monitor machine vibration and continuously adapt through model-based learning** to ensure accuracy even under complex conditions.

Non-contact taut belt high accuracy performance weighing platform

Using patented non-contact taut band high-accuracy technology combined with a low-friction aluminum conveyor and precision-controlled servo motor, the system ensures exceptional accuracy on high-speed production lines.

High-Performance Weighing

Weighing range: **5~600g**; Up to **400** ppm depending on packaging size;Suitable for small-dose or medium-size pharmaceutical packages.

FDA Approval

3Q Documentary

Factory **A**cceptance **T**est

Compliance with Pharmaceutical Regulatory Requirements

- Supports accurate and repeatable dynamic weight measurement. Provides required certifications and supports **FDA 21 CFR Part 11** audit trail.
- Offers fail-safe rejectors, reject verification, open-flap detection, and more.

Stable and Precise Performance

Flexible and Convenient

- Compact design with adjustable height, easy to integrate with cartoners;
- Modular weighing unit for easy installation and maintenance;
- Touchscreen with **30°** tilt for ergonomic operation;



30°vertical flip



Durable and Reliable

- Industrial-grade materials and maintenance-free key components reduce the downtime for equipment maintenance. Designed for **24/7** continuous operation.

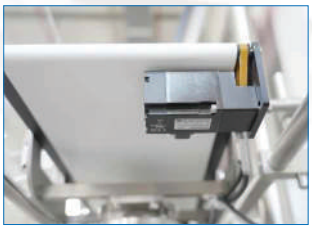

Hygienic Design

- GMP-compliant structure with smooth surfaces for easy cleaning meet the requirements of clean production environments to avoid the risk of cross-contamination.



Height adjustable

Air draft cover

- Prevents air turbulence and vibration interference;
- Blocks dust contamination, avoid cross-contamination;
- Transparent for real-time production monitoring.

Smart and User-Friendly Operation

User-Friendly Interface

- **15.6**-inch full-color touchscreen, editable, intuitive UI;
- One-touch style switching and real-time statistics;

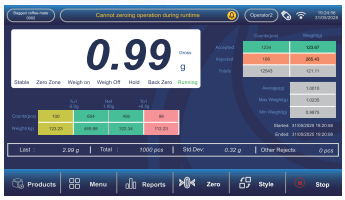



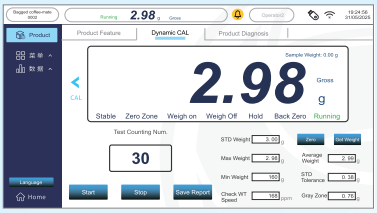

Intelligent Learning

- **AI-based** intelligent dynamic filtering; automatic optimization;



Data Analytics

- Multiple big-data analysis dashboards; Real-time production trend monitoring with **SPC**;

- Up to **200** product recipes improve the efficiency of production turnover;
- **256 GB** data storage for full traceability;



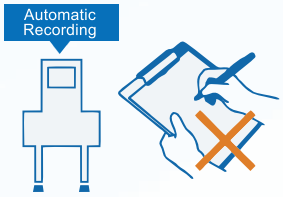

Application Flexibility

— for pharmaceutical packaging of various forms

Hawk Pharma can weigh diverse pharmaceutical packaging, and through precise weight analysis to achieve the quality control.

Packaging type

- cartons, glass/plastic bottles, sachets, film packs;

- Detects missing inserts (e.g., mandatory drug leaflets);
- Detects missing tablets/capsules or insufficient filling;



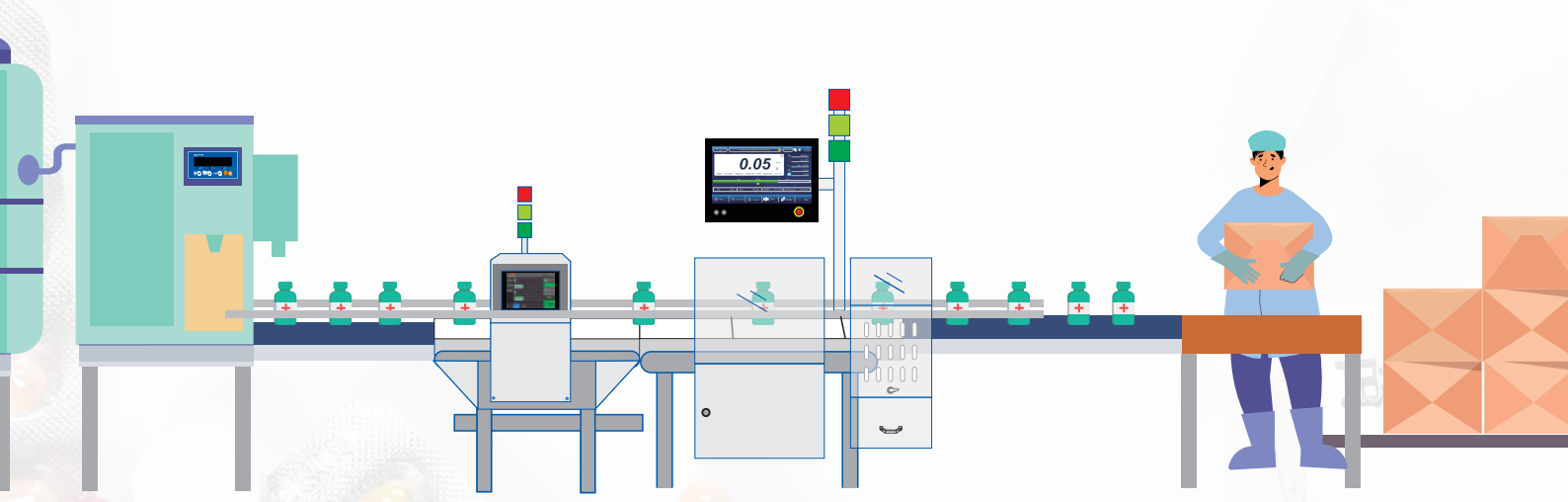

Technical Specifications

Model	Hawk Pharma
Weight Range	5~600g (0.011~1.32lb)
Top Speed	400 ppm
Best Accuracy	±0.1g
Motor	Servo Motor
Structure	SS304 / Aluminum
Operating Temperature	0°C~+45°C (+32°F~+113°F)
Humidity	20%~90%, Non- condensing
Power Supply	200-240VAC, 50/60 HZ, 480W
Air Supply	5.5-6.9 bar (80-100 psi)
IP Grade	**IP54**
Line Height	800mm±50mm
Communication	RS485, Modbus TCP/IP

1. The actual accuracy depends on the product's length, weight, speed and stability.
2. The push rejector needs an independent conveying device, and the cantilever length of the conveyor should not exceed 1250mm (combined configuration).

Dimensions (Unit: mm)

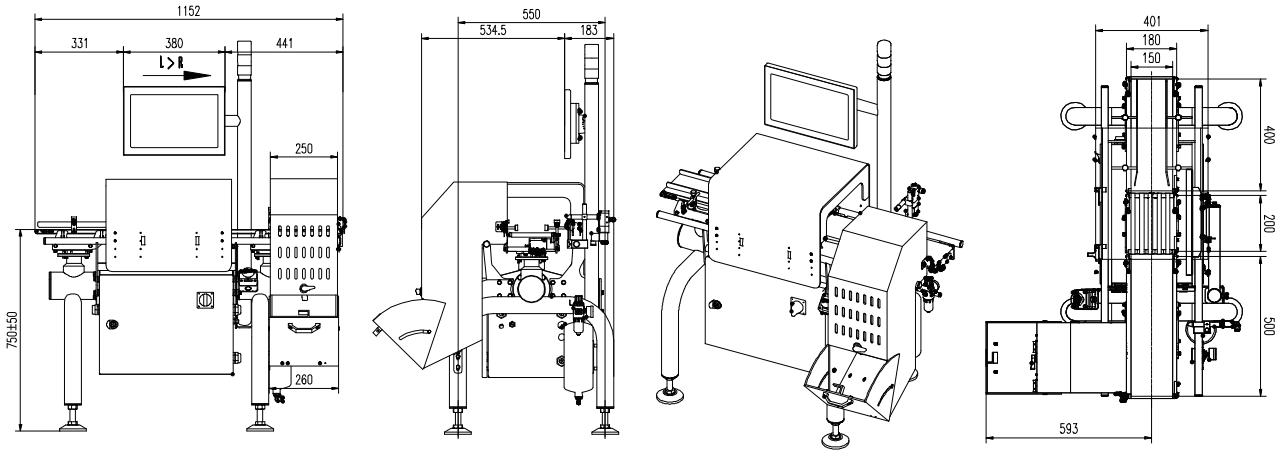

Prompt Equipments Private Limited
7th Floor, Shaligram Corporates, C. J. Marg, Iskcon - Ambli Road,
Ahmedabad, Gujarat, India - 380058
www.promptscale.com | sales@promptscale.com | Follow us on:
For more information, call us: **+91 908 1600 888**

30 prompt Years of Innovation and Trust